WE LOVE TECHNOLOGY FIBRO

DATA SHEET COLLECTION
FIBROMOD

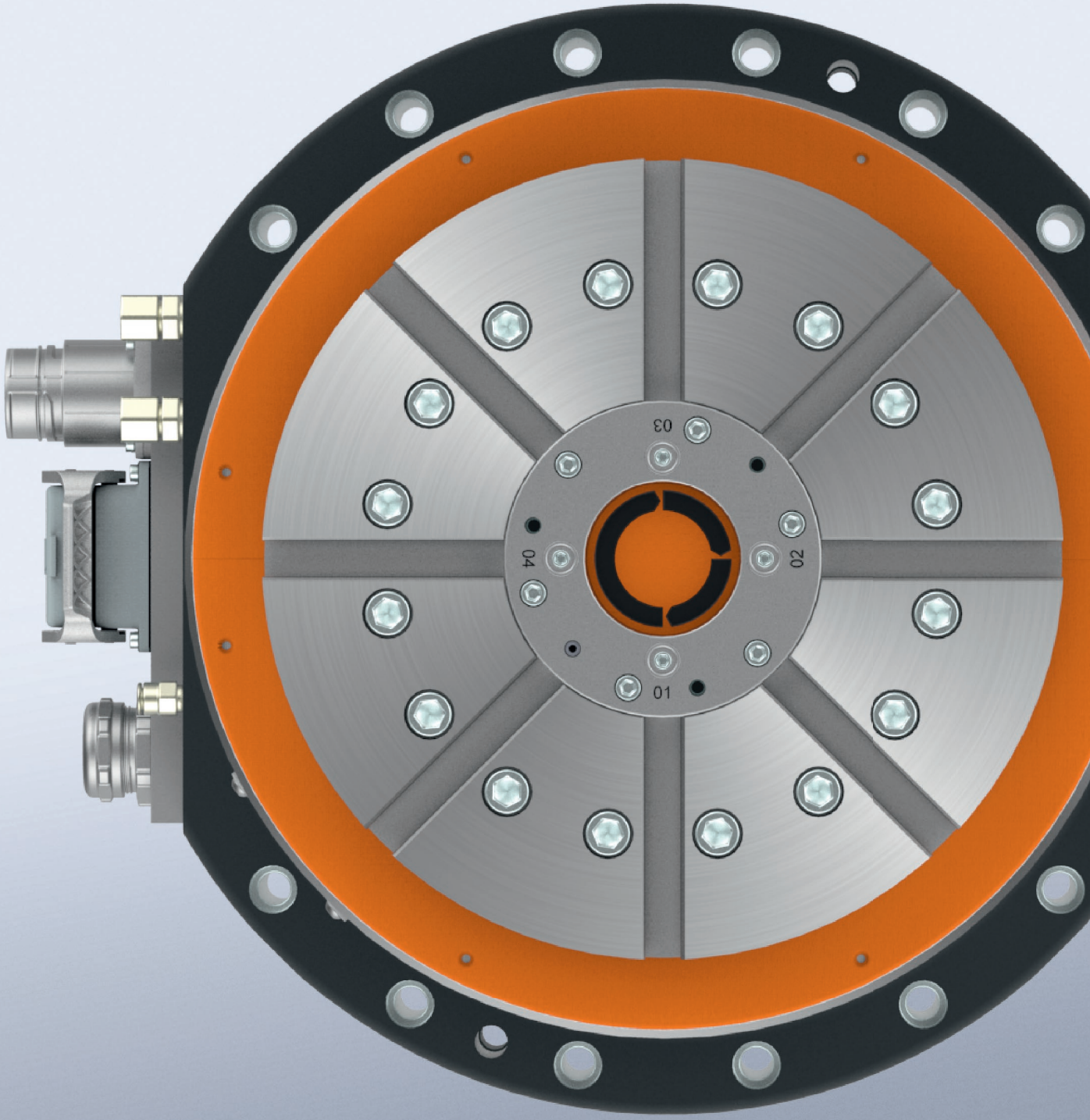

STAND 02/2023

MEMBER OF THE LÄPPLE GROUP

LÄPPLE

FIBROMOD
ENCODING

	1		2		3		4		5		6		7		8		9		10
FM		.		.		.		.		.		.		.		.		.	

1 Type of Housing

Customized	0
Standard	1

2 Size

Size 0	00
Size 1	01
Size 2	02
Size 3	03
Size 4	04
Size 5	05
Size 6	06
Size 7	07
Size 8	08
Size 9	09
Size 10	10

3 Drive type

Drive unit	1	
Trunnion support	2	
Worm-drive ott		1
Worm-drive duplex		2
Direct-drive basic		3
Direct-drive High-Speed		4
Twin-Drive		5
Without drive		9

4 Table top dimension

Dimension Ø in mm	xxxx

5 Table top model

Customized version	0		
Standard version	1		
Customized shape		0	
Round		1	
Rectangular		2	
Other			0
Only centric alignment fitting			1
Hole pattern			2
T-slots star-shaped			3
T-slots parallel			4
Zero-point clamping devices			5
DIN-like pallet clamping			6
Preparation for jaw boxes			7

6 Clamping

Customized clamping	0
Without clamping	1
Pressureless open	2
Pressureless closed	3
Pressureless closed with emergency brake	4

7 Measuring system

Indirect measuring with motor encoder	1		
Delivery with direct measuring device equipped	2		
Without messuring system	9		
Other measuring device		0	
RCN 231x (±6,5")*		1	
RCN 251x (±4")*		2	
RCN 23xx (±6,5")*		3	
RCN 25xx (±4")*		4	
RCN 83xx (±3,5")*		5	
RCN 85xx (±2,5")*		6	
Without messuring system		9	
Customized interface			0
EnDat			1
Fanuc			2
Mitsubishi			3
Without messuring system			9

8 Motoranordnung

Preparation for servomotor	1		
Servo motor equipped (sourcing by FIBRO)	2		
Servo motor equipped (sourcing by customer)	3		
Without motor	9		
Customized position		0	
Drive on the left		1	
Drive on the right		2	
Drive on topside		3	
Drive on downside		4	
Drive integrated		5	
Drive backside		6	
Without motor		9	
Other			0
Siemens			1
Fanuc			2
Mitsubishi			3
Without motor			9

9 Gearbox

Customized gearbox	0
Direct	1
Planetary gearbox	2
Belt drive	3
Angular gearbox	4
Without gearbox	9

10 Rotary Union

Customized version	0	
Contact sealings	1	
Non contact sealings	2	
Without rotary union	9	00
No. of lines		xx

*Positioning accuracy rotary table

FIBROMOD
FM 1.03

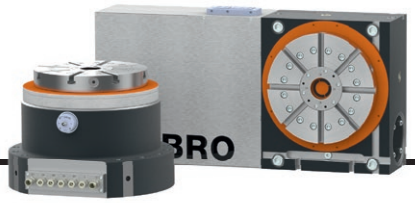

DIMENSIONS

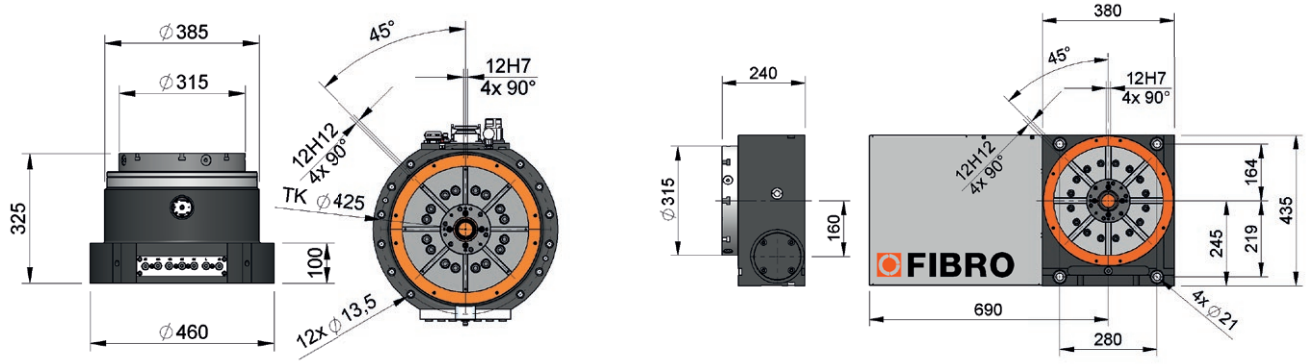

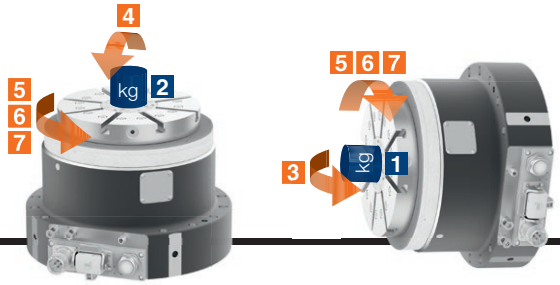

TECHNICAL DATA

				Worm-Drive	Twin-Drive	Direct-Drive Basic	Direct-Drive High-Speed
Table top Ø			mm	315 (400)	315 (400)	315 (400)	315 (400)
Bearing size				200	200	200	200
Standard transmission ratio				120:1	67.5:1	1:1	1:1
Weight			kg	220	260	230	220
Indexing accuracy	Mechanical			±10"	-	-	-
	Direct measuring device			±2.5"	±2.5"	±2.5"	±2.5"
Concentricity accuracy of centre hole			mm	0.02 [0.01]*	0.02 [0.01]*	0.02 [0.01]*	0.02 [0.01]*
Axial runout based on Ø 315 mm			mm	0.02 [0.01]*	0.02 [0.01]*	0.02 [0.01]*	0.02 [0.01]*
Plane parallelism table top/contact surface of housing			mm	0.03 [0.02]*	0.03 [0.02]*	0.03 [0.02]*	0.03 [0.02]*
Rectangularity table top/contact surface of housing at vertical working position				±30" [±15"]*	±30" [±15"]*	±30" [±15"]*	±30" [±15"]*
max. rotational speed			1/min	25	50	100	1,000 (2,000)
max. mass moment of inertia			kgm^2	100	100	100	50
max. transport load	Rotary axis horizontal	1	kg	650	650	650	500 (250)
	Rotary axis vertical	2	kg	2,000	2,000	1,000	500
Tilting moment	Rotary axis horizontal	3	Nm	6,600	6,600	6,600	4,000
	Rotary axis vertical	4	Nm	8,000	8,000	8,000	6,000
Drive torque (S6/40%ED)		5	Nm	2.000	3.000	435	300
perm. tangential moment passive clamping		6	Nm	1,000	1,000	1,000	1,000
perm. tangential moment with hydraulic clamping		7	Nm	4,000	4,000	4,000	4,000
Operating pressure			bar	80	80	80	80

[...] optional
* higher accuracies on request

Technical data can be downloaded from www.fibro.com.

FIBROMOD
FM 1.04

DIMENSIONS

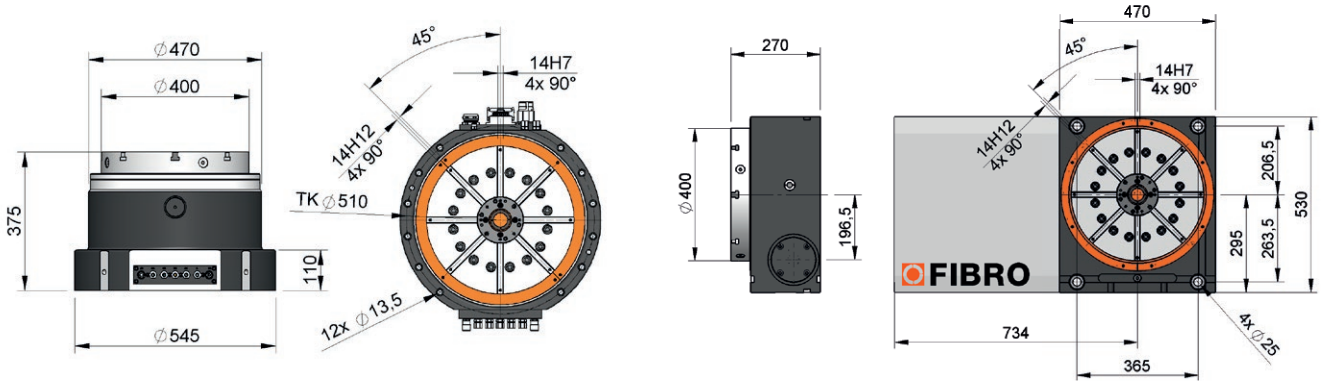

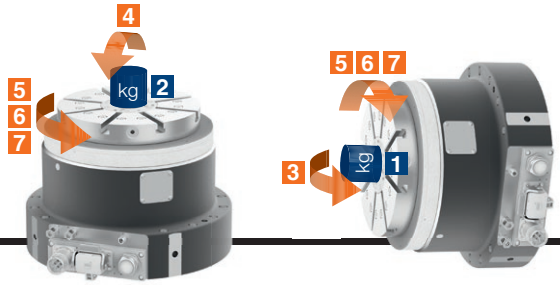

TECHNICAL DATA

				Worm-Drive	Twin-Drive	Direct-Drive Basic	Direct-Drive High-Speed
Table top Ø			mm	400 (500)	400 (500)	400 (500)	400 (500)
Bearing size				260	260	260	260
Standard transmission ratio				120:1	67.5:1	1:1	1:1
Weight			kg	350	490	320	320
Indexing accuracy	Mechanical			±15"	-	-	-
	Direct measuring device			±2.5"	±2.5"	±2.5"	±2.5"
Concentricity accuracy of centre hole			mm	0.02 [0.01]*	0.02 [0.01]*	0.02 [0.01]*	0.02 [0.01]*
Axial runout based on Ø 400 mm			mm	0.02 [0.01]*	0.02 [0.01]*	0.02 [0.01]*	0.02 [0.01]*
Plane parallelism table top/contact surface of housing			mm	0.03 [0.02]*	0.03 [0.02]*	0.03 [0.02]*	0.03 [0.02]*
Rectangularity table top/contact surface of housing at vertical working position				±30" [±15"]*	±30" [±15"]*	±30" [±15"]*	±30" [±15"]*
max. rotational speed			1/min	25	50	100	800 (1,500)
max. mass moment of inertia			kgm^2	200	200	200	80
max. transport load	Rotary axis horizontal	1	kg	900	900	900	700
	Rotary axis vertical	2	kg	2,900	2,900	1,500	700
Tilting moment	Rotary axis horizontal	3	Nm	10,000	10,000	10,000	6,000
	Rotary axis vertical	4	Nm	12,000	12,000	12,000	7,500
Drive torque (S6/40%ED)		5	Nm	3,600	4,000	800	850
perm. tangential moment passive clamping		6	Nm	1,250	1,250	1,250	1,250
perm. tangential moment with hydraulic clamping		7	Nm	5,000	5,000	5,000	5,000
Operating pressure			bar	70	70	70	70

[...] optional
* higher accuracies on request

Technical data can be downloaded from www.fibro.com.

FIBROMOD
FM 1.05

DIMENSIONS

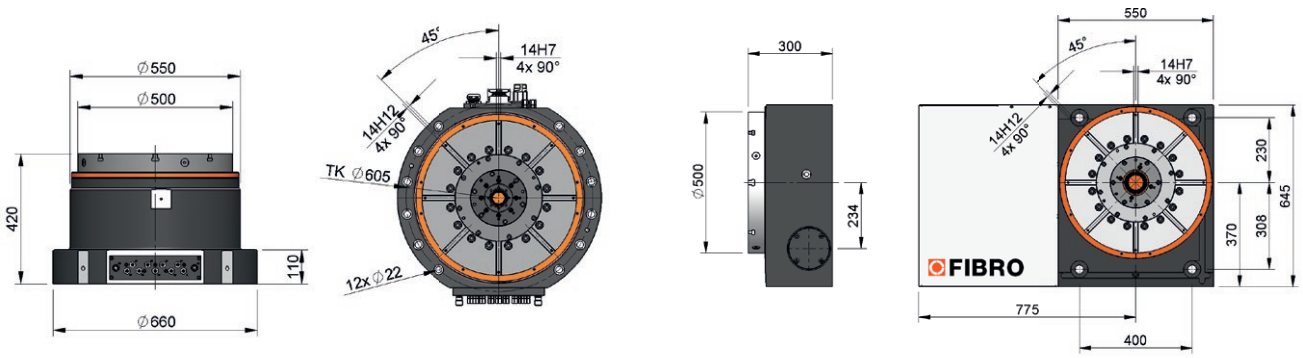

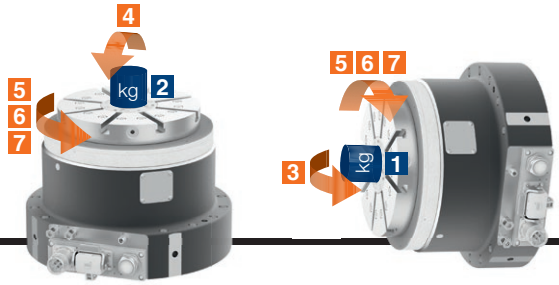

TECHNICAL DATA

				Worm-Drive	Twin-Drive	Direct-Drive Basic	Direct-Drive High-Speed
Table top Ø			mm	500 (630)	available from Q2/2023	500 (630)	500 (630)
Bearing size				325		325	325
Standard transmission ratio				120:1		1:1	1:1
Weight			kg	580		530	500
Indexing accuracy	Mechanical			±10"		–	–
	Direct measuring device			±2.5"		±2.5"	±2.5"
Concentricity accuracy of centre hole			mm	0.02 [0.01]*		0.02 [0.01]*	0.02 [0.01]*
Axial runout based on Ø 500 mm			mm	0.020 [0.012]*		0.020 [0.012]*	0.020 [0.012]*
Plane parallelism table top/contact surface of housing			mm	0.035 [0.025]*		0.035 [0.025]*	0.035 [0.025]*
Rectangularity table top/contact surface of housing at vertical working position			mm	±30 [±15]		±30 [±15]	±30 [±15]
max. rotational speed			1/min	25	available from Q2/2023	100	600 (1,100)
max. mass moment of inertia			kgm^2	300		300	120
max. transport load	Rotary axis horizontal	1	kg	1,200		1,200	900
	Rotary axis vertical	2	kg	4,500		1,750	900
Tilting moment	Rotary axis horizontal	3	Nm	16,000		16,000	7,500
	Rotary axis vertical	4	Nm	18,000		18,000	12,000
Drive torque (S6/40%ED)		5	Nm	4,500		1250	1150
perm. tangential moment passive clamping		6	Nm	1,500		1,500	1,500
perm. tangential moment with hydraulic clamping		7	Nm	6,000		6,000	6,000
Operating pressure			bar	63		63	63

[...] optional
* higher accuracies on request

Technical data can be downloaded from www.fibro.com.

WE LOVE TECHNOLOGY

FIBRO GMBH | Weidachstraße 41-43 | 74189 Weinsberg | GERMANY | fibro.com