2497.12.00500. / .01000. / .01900.

Gas springs CX Compact Xtreme

FIBRO

Gas spring CX, Compact Xtreme, for cost-efficient tools
2497.12.00500. / .01000. / .01900.

FIBRO - The Safer Choice: Properties of the gas springs CX, Compact Xtreme

Safety features

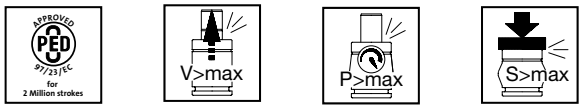

Reliability features

FIBRO training

Additional information, see fold-out page or visit www.fibro.de

Description:

The gas springs CX, Compact Xtreme 2497.12., have been specially developed for use in tools in the white goods, electronics and automobile industries.

These gas springs allow tools to be realised that require extremely high forces and very high stroke lengths despite the smallest of installation dimensions.

The CX gas spring has a piston rod sealing design similar to the POWERLINE series (2487.12.).

The max. filling pressure of 200 bar generates an extremely high force with the smallest installation dimensions.

Moreover, CX gas springs allow higher stroke frequencies to be realised than with other gas springs available on the market.

Despite unusually high forces and pressures, the CX gas springs can be attached with the threads in the base, inserted loose in bore holes as well as used on composite panels.

The gas springs CX, Compact Xtreme can be connected via the valve connection on the bottom both in hose network systems in conjunction with an adapter base plate 2497.00.20. with side connection, as well as directly in a composite panel system.

For the filling of high pressures up to 200 bar, we recommend our nitrogen compact booster 2480.00.32.71.

Properties:

- available spring sizes 2497.12.00500., 2497.12.01000 and 2497.12.01900.
- higher filling pressures up to 200 bar
- compact installation heights and diameters
- extremely high starting forces of 510 daN to 1920 daN
- Stroke lengths up to 80 mm
- unique safety features of FIBRO gas springs:
  Safety piston rod; overpressure protection; overstroke protection.

New design – new function

The groove prevents the piston rod from plunging completely if the spring empties.

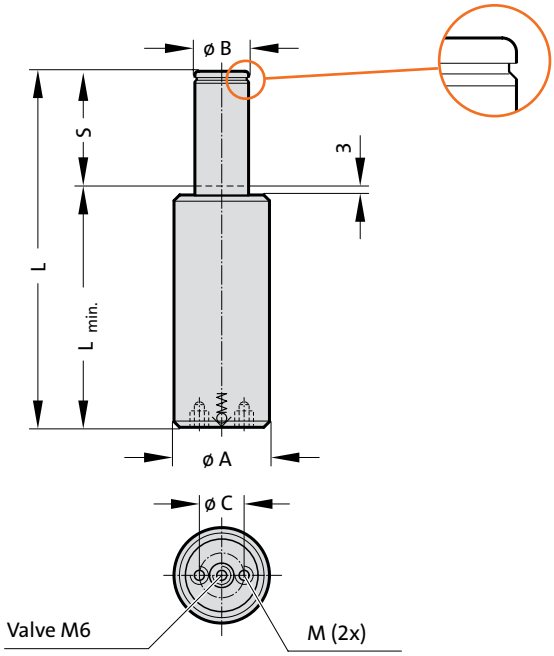

Note:

* For stroke lengths over 25 mm, the gas pressure springs in the tool should be attached to the base through the threaded holes.
** for full stroke

Order number	S stroke	Spring force in daN at 200 bar / +20°C: Initial spring force	End spring force**	ø A	ø B	ø C	M	L ± 0.25	L min.
2497.12.00500.010	10		660					75	65
2497.12.00500.015	15		710					85	70
2497.12.00500.025	25		790					105	80
2497.12.00500.038	38*	510	870	32	18	15	M6 x 5.5	130	92
2497.12.00500.050	50*		910					155	105
2497.12.00500.063	63*		880					190	127
2497.12.00500.080	80*		920					225	145
2497.12.01000.010	10		1330					75	65
2497.12.01000.015	15		1440					85	70
2497.12.01000.025	25		1610					105	80
2497.12.01000.038	38*	980	1690	38	25	17	M6 x 6.5	135	97
2497.12.01000.050	50*		1770					160	110
2497.12.01000.063	63*		1650					205	142
2497.12.01000.080	80*		1730					240	160
2497.12.01900.010	10		2630					80	70
2497.12.01900.015	15		3180					95	80
2497.12.01900.025	25		3090					115	90
2497.12.01900.038	38*	1920	3190	50.2	35	26	M6 x 6.5	150	112
2497.12.01900.050	50*		3380					175	125
2497.12.01900.063	63*		3480					205	142
2497.12.01900.080	80*		3560					245	165

Adapter base plate with connecting nipple 2497.00.20.

Technical information

Pressure medium	Nitrogen - N_2
max. filling pressure	200 bar
min. filling pressure	25 bar
Working temperature	0°C to +80°C
temperature-dependent increase in force	±0.3%/°C
strokes/min.	~50 to 200 (at 20°C)
max. piston speed	1.6 m/s

Ordering example:

Gas spring CX, Compact Xtreme	=	2497.12.
Spring force = 1900 daN	=	01900.
Stroke = 80 mm	=	080
Order number	=	2497.12. 01900. 080

Mounting variations

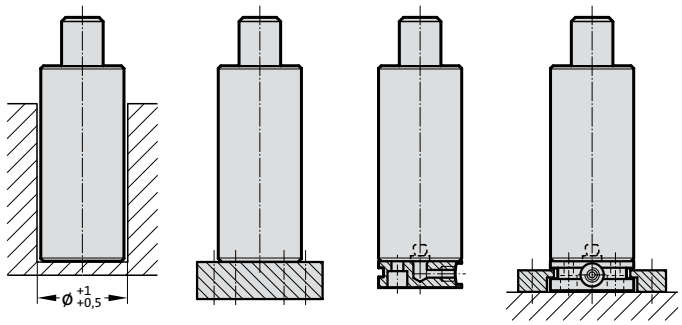

installed loose in the bore | screw mounted at the base | adapter baseplate | split clamping flange, only with adapter baseplate

To prevent an overstroke, an end stop should be used on the tool side.

We recommend providing a stroke reserve of 10% of the nominal stroke length or 5 mm.

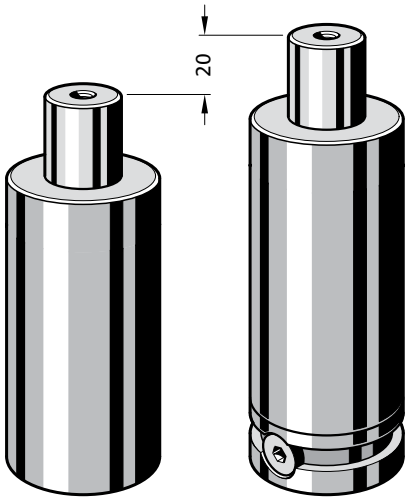

2497.12. 2497.12. + 2497.00.20.

Adapter base plate with connecting nipple

The 2497.00.20. adapter base plate with connecting nipple facilitates the connection of the 2497.12. gas springs CX, Compact Xtreme to the hose network.

The 2497.00.20.01000 and 2497.00.20.01900 adapter base plates with connecting nipple have a valve and can be utilised for hose network or autonomously.

The 2497.00.20.00500 adapter base plate with connecting nipple does not have a valve. Thus, it can only be used in the hose network.

The U groove introduced in the adapter plate facilitates an attachment of the gas spring with the 2480.022. Tension flange, divided.

2497.00.20.00500

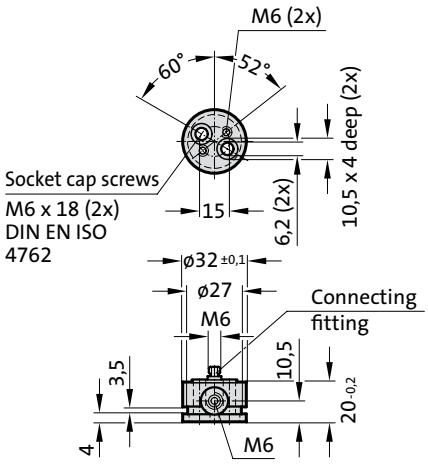

2497.00.20.01000

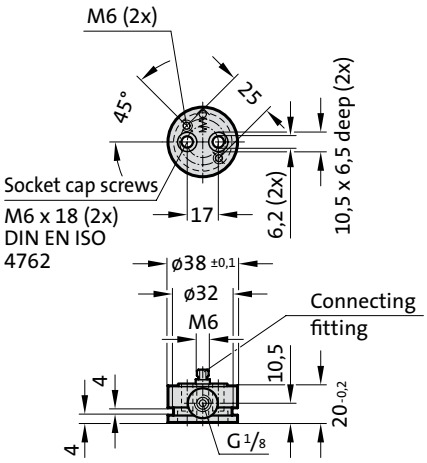

2497.00.20.01900

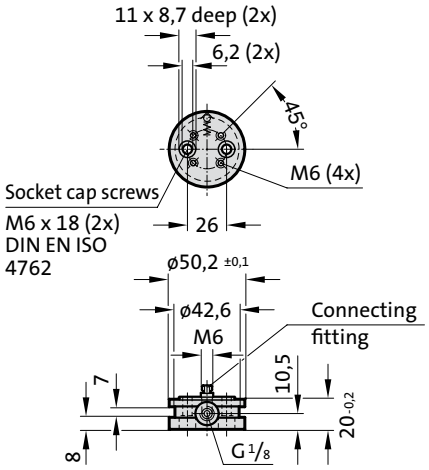

The FIBRO reliability features

Flexible guides: The Flex Guide™ System

The Flex Guide™ System is a flexible guide in the gas spring which absorbs lateral movements of the piston rod. It minimises friction and lowers the operating temperature.

Your advantage:
- ► Long service life
- ► Higher stroke frequencies, i.e. more strokes per minute

Secure hose connections:
The Dual Seal™ System

The Dual Seal™ System from FIBRO combines a metal seal and a soft elastomer seal. For hose connection systems, the system ensures two sealed connection points and prevents rotation.

Your advantage:
- ► Sealed connection, even when vibrating
- ► High process safety
- ► Minimised tool downtimes
- ► Simple installation thanks to the anti-rotation function

Wireless monitoring:
The Wireless Pressure Monitoring (WPM) System

The patent-pending Wireless Pressure Monitoring System (WPM) wirelessly monitors the pressure level and temperature of FIBRO gas springs. Before a faulty part is created, the press operator receives a message from the WPM and can initiate appropriate measures.

Your advantage:
- ► Preventative quality assurance
- ► High process safety
- ► Minimised tool downtimes
- ► Reduced maintenance effort

Possible faults are specifically displayed. Thus, maintenance intervals can be extended. Maintenance and repair costs are reduced.

Protected piston rods: The FIBRO bellows

The patented FIBRO bellows (Piston Rod Protection) reliably protects the piston rods of gas springs against dirt, oil, and emulsion. This prevents damage to the surface of the piston rod and leakage at the inner seals.

Your advantage:
- ► Significantly longer service life under harsh operating conditions

Energy savings: DS gas springs

The DS gas spring is not forced out for every stroke of the upper part. This saves press energy over the entire spring stroke.

Your advantage:
- ► Significantly longer service life of the gas spring
- ► Minimised tool downtimes thanks to reduced wear
- ► Energy savings of up to 80% compared to the use of standard gas springs as tool distancing
- ► Reduced maintenance effort

FIBRO training

Take advantage of the FIBRO training programme to get to know and implement the safety and reliability of FIBRO gas springs.

FIBRO - The Safer Choice

At FIBRO, safety and reliability are always our highest priority.
Of course, this also applies to FIBRO gas springs.
Their unique safety features make them one of the safest gas springs on the market.

The FIBRO safety features

PED certification for 2 million strokes

FIBRO gas springs are developed, manufactured and tested for a minimum of 2 million* full strokes in accordance with DGRL97/23/EG. The springs deliver this full performance at the maximum permissible limits in terms of filling pressure and operating temperature - even when combined with any of the various mounting types available.

* Calculation value for durability

Your advantage:

► Guaranteed safety over the entire service life of the spring. Repair kits and qualified training by FIBRO service additionally increases the effectiveness and process safety.

Overstroke protection

Conventional gas springs can burst in the event of an over-extended stroke. If this happens, parts flying around can become dangerous projectiles.

FIBRO gas springs are different: In the event of an over-extended stroke, the patented protection system (depending on the spring type) ensures that either the cylinder wall of the gas spring deforms in a specific way (A) or the piston rod destroys a bursting screw in the base of the cylinder (B) allowing the gas to escape.

Your advantage:

► No danger of parts flying around if an overstroke occurs.

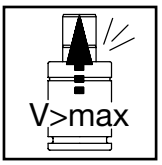

Return-stroke protection

If tool components jam and the pressed piston rod is then suddenly released, this would pose a serious risk with conventional gas springs: If this happens, the piston rod can fly out of the cylinder like a projectile.

FIBRO gas springs are different: Special guides and a patented safety stop in the piston rods ensure your safety. If the speed is too high during the return stroke, the collar on the piston rod will automatically break. The integrated safety stop then destroys the seal, this allows the gas to escape into the atmosphere and the gas spring to become depressurised.

Your advantage:

► No risk of a piston rod firing out if the return stroke is too fast

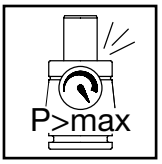

Overpressure protection

Conventional gas springs can burst if the pressure rises above a maximum permitted value. If this happens, parts flying around can become dangerous projectiles.

FIBRO gas springs are different: If the pressure rises above the maximum permitted value, the safety collar on the sealing set is automatically destroyed.
The gas then escapes into the atmosphere and the gas spring is depressurised.

Your advantage:

► No bursting parts in the event of overpressure

The safety features mentioned here have been realised for all FIBRO gas springs with only several exceptions.
Please refer to the respective data sheets to ascertain the specific safety standard of the gas spring you are interested in or contact FIBRO GmbH directly for this information.

FIBRO

Standard Parts

FIBRO GmbH DE
August-Läpple-Weg
74855 Hassmersheim
T +49 6266 73-0
F +49 6266 73 237
info@fibro.de

FIBRO France Sarl FR
26, avenue de l'Europe
67300 Schiltigheim
T +33 3 90 20 40 40
F +33 3 88 81 08 29
info@fibro.fr

FIBRO Inc. US
139 Harrison Avenue
Rockford, IL 61104
T +1 815 2 29 13 00
F +1 815 2 29 13 03
info@fibroinc.com

FIBRO Asia Pte. Ltd. SG
9, Changi South Street 3, #07-04
Singapore 486361
T +65 65 43 99 63
F +65 65 43 99 62
info@fibro-asia.com

FIBRO INDIA IN
PRECISION PRODUCTS PVT. LTD.
Plot No: A-55, Phase II, Chakan Midc,
Taluka Khed, Pune - 410 501
T +91 21 35 33 88 00
F +91 21 35 33 88 88
info@fibro-india.com

FIBRO (SHANGHAI) CN
STANDARD PARTS CO., LTD.
1st Floor, Building 3, No. 253, Ai Du Road
Pilot Free Trade Zone, Shanghai 200131
T +86 21 60 83 15 89
F +86 21 60 83 15 99
info@fibro-china.com

FIBRO KOREA CO., LTD. KR
Namdongsanggong Bd. 401ho
632-1, Gojan-Dong, Namdong-Gu
Incheon, 405-817
T +82 32 821 0130 ~1
F +82 32 821 0030
fibro@chol.com

www.fibro.com

Order No. 2.5521.00.0114.01000