FIBRODRIVE *plus*

Interface description for CNC-control

FIBRODYN DM, FIBROTOR

Translation of the interface description

You are not permitted to provide this information to either third parties or competitors without our express, written permission!

Subject to change without notice.

Contact person: 2
Safety information 3
Symbols used 3
Safety information for electrical equipment for use in industrial power plants 3
Control mode 7
Important note 7
PC-Software Servo-Link 8
Amplifier operation 11
SPS-Interface 12
Fieldbus CANopen and EtherCAT (only at FIBROTOR EM.NC) 13
ProfiBus 14
ProfiNet 15
SPS-Interface with external encoder (only at FIBROTOR EM.NC) 16
FIBRO-ServoLink and FIBRO-AKB.01 17
Wiring plug for itself 19
Cable assemblies on one side, the other end open 19

Contact person:

Mr. Schmitt Tel.: +49(0)7134-73296
e-mail: hj.schmitt@fibro.de

Mr. Kowatsch Tel.: +49(0)7134-73258
e-mail: g.kowatsch@fibro.de

FIBRO GmbH
Business Area Rotary Tables
Postfach 11 20
74183 Weinsberg, Germany

Weidachstr. 41 -43
74189 Weinsberg, Germany

Service
e-mail: rtservice@fibro.de
Tel.: +49(0)7134 / 73 - 243
Fax: +49(0)7134 / 73 - 344

Safety information

Safety	
Symbols used	
DANGER	Indicates an immediately dangerous situation! Failure to observe this warning will result in a fatal or serious injury.
WARNING	Indicates a possibly dangerous situation! Failure to observe this warning may result in serious injuries or death.
NOTE	Provides information, tips, and recommendations that are important for the safety and proper functioning.

Safety information for electrical equipment for use in industrial power plants

This information sheet with the warnings is considered a supplement to the product-specific operating instructions and must be paid particular attention for reasons of safety.

DANGER	***DANGER!*** *The electrical machines or devices are operating equipment for use in industrial power plants. During operation, this equipment has dangerous, live, bare parts, and also moving or rotating parts, if necessary. They could cause severe physical injury or material damage, for example, if the required covers are improperly removed, if used improperly, incorrect operation or insufficient maintenance.*

For the safety of the system, the responsible persons must therefore ensure that only qualified persons are contracted to perform work on the machine or devices; these persons must have the supplied operating instructions and other necessary documents of the product documentation always available during all corresponding work and are obliged to observe the information in these documents consistently;
unqualified persons are forbidden from performing work on the machine or equipment or working in its vicinity.

Qualified personnel are persons who, due to their education, experience, training, as well as their knowledge of pertinent standards, provisions, accident prevention regulations, and company conditions, have received authorisation from the persons responsible for the safety of the system to perform the required tasks whilst recognising and preventing possible dangers (for the definitions of expert personnel, also see VDE 0105 or IEC 364).
This includes but is not limited to having knowledge of first-aid measures and local rescue facilities.

For work on high-voltage systems, the prohibition of the use of unqualified personnel is regulated in DIN VDE 0105 or IEC 364, for example.

DANGER	***DANGER!*** ► The fundamental planning work of the system, as well as all work with regard to transport, assembly, installation, commissioning, maintenance and repair must be performed by qualified personnel and inspected by responsible specialized personnel. ► In particular, the following must be observed: Technical data and specifications about the permitted use (assembly, connection, environmental and operating conditions, and requirements) which, among others, are contained - in the catalogue - the order documents - the operating instructions - the rating plate data of the remaining product documentation. ► The general set-up and safety regulations, the local system-specific conditions and requirements, the proper use of tools, lifting and transport equipment, the use of personal safety equipment, assembly requirements for devices, which are supplied, if necessary, corresponding to IP00 (without cover): ► During operation, the required protection against accidental contact must be present, respectively, a dangerous proximity must be prevented.

NOTE	*For reasons of clarity, the operating instructions are not able to include all detailed information about possible versions and are not able to take into account every conceivable case with regard to setup, operation or maintenance.*

Accordingly, the information contained in the operating instructions only contains information about the proper use of the machine or equipment in industrial areas of application which is required for qualified personnel (see above).

If higher requirements are placed, for example, in special cases for an intentional use of the machinery or equipment in non-industrial areas (e.g. prevention of contact by children's fingers or similar), the fulfilment of these additional requirements must be ensured during the assembly by the provisioning of additional safety measures on the system.

For any lack of clarity with regard to this, particularly with regard to missing product-specific detailed information, the required clarifications must be obtained. For these types of queries, please always specify the machine type designation and manufacturing number.

NOTE	We recommend obtaining support from the FIBRO Service Department for service tasks.

NOTE	*For general work, e.g. incoming shipments (transport damage), for long-term storage and preservation of machines, for foundation inspection, for mounting of couplings, setting up and aligning machines, installation measures etc., you can find detailed information in the operating instructions. If necessary, you can also obtain this from the distributors.*

WARNING	***WARNING!*** ► *To prevent malfunctions, the stipulated maintenance, inspection, and overhaul measures must be performed regularly by experienced service personnel (see above).* ► *If changes to normal operation (higher current consumption, temperatures, vibrations, noises etc. or the activation of monitoring equipment) are noticed, this may indicate an impairment of the function. The responsible maintenance personnel must be notified immediately in such cases to prevent malfunctions which could cause an indirect or immediate severe personal injury or damage.*

WARNING	***SWITCH OFF THE EQUIPMENT IMMEDIATELY IN CASES OF DOUBT!***

The contents of these operation instructions and product documentation shall not become part of or modify any prior or existing agreement, commitment or legal relationship. All obligations of FIBRO result from the underlying purchase contract, which also contains the complete and solely valid warranty regulation. These contractual regulations are neither amended nor limited by the descriptions contained in these operation instructions and documentation.

NOTE	*Information about the observance of accident prevention regulations*

Since we do not supply an operationally ready machine or system, but rather, a component, we are not able to provide standardised safety equipment without knowledge about the rotary indexing table environment.

Our accessories program includes different covers over toothed belts, V-belts, chains, and end-switch actuation, either for the purposes of contact protection or also in sealed design for all sizes and drive versions.

If you have ordered the rotary table without sufficient safety equipment, you must absolutely provide for this yourself.

Due to the previously mentioned reasons, we would like to again point out that we shall not accept any claims directed towards us that arise from non-observance of the accident prevention regulations in question.

Also outside of our scope of responsibility are cutting and crushing hazards which arise through drill holes or other openings, both through the table top as well as through the underlying or overlying fixed table plate.

This sheet was already sent to you with the order confirmation.

WARNING	***WARNING!*** ► *The switch cabinet contains electrical devices and components of these electrical devices with live dangerous voltages. Improper use of these devices can therefore lead to death or severe personal injury or damage.* ► *Installation and commissioning may only be performed by qualified, trained, and instructed electricians. These persons must be fully familiar with the content of these instructions.* ► *The precise knowledge of the operating instructions, the circuit diagram, the control system manuals, as well as the operating instructions of the rotary table is a requirement for a trouble-free continuous operation*

Control mode

Decentralized servo motor with integrated electronics
Programming is done via PC. Operation is done via the following variants
- Setpoint setting,
- PLC
- Fieldbus interfaces
- Fieldbus interfaces with ext. measuring circuit is possible only with ProfiBus and ProfiNet.

The measuring circuit (resolver or absolute) is located to the servo motor, besides there is the possibility of an additional measuring circuit (indirect on the second shaft end or directly in the center of rotary table axis) to evaluate.
Sinusoidal acceleration curves significantly reduce the stress the mechanical components.

Power supplies and guard door hedging are provided in a separate switchbox

Important note

The precise knowledge of the user manual, of the wiring diagram, the manual for the control and the manual of the rotary table before operating with the system is a prerequisite for trouble-free operation.
You are not permitted to provide this information to either third parties or competitors without our express, written permission!
We reserve all rights to DIN 34-1-0.
Subject to change without notice.

ATEX 95
CANopen
PROFIBUS
PROFINET
EtherCAT

FIBRO GmbH Werk I
Postfach 1120 · DE-74183 Weinsberg
Weidachstr. 41-43 · DE-74189 Weinsberg
Telefon +49 (0)71 34-73-0*
Telefax +49 (0) 71 34-73-120

info@fibro.de
www.fibro.com

PC-Software Servo-Link

Parameter

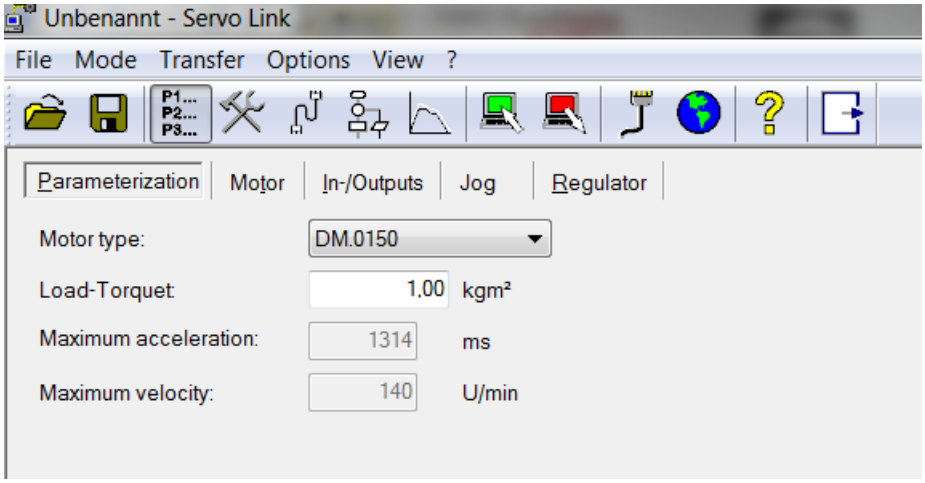

Setup

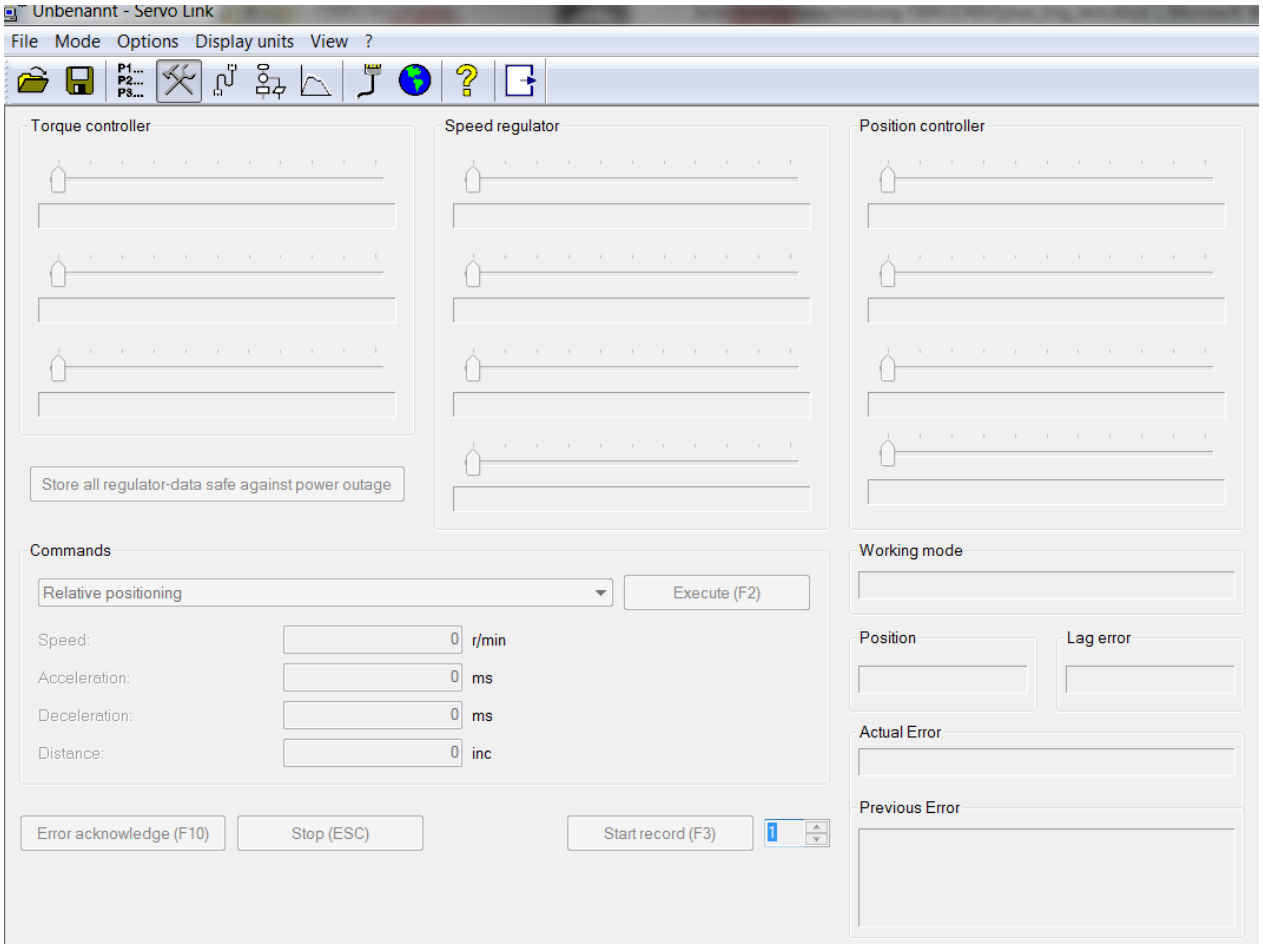

FIBRO GmbH Werk I
Postfach 1120 · DE-74183 Weinsberg
Weidachstr. 41-43 · DE-74189 Weinsberg
Telefon +49 (0)71 34-73-0*
Telefax +49 (0) 71 34-73-120

info@fibro.de
www.fibro.com

Diagnostic

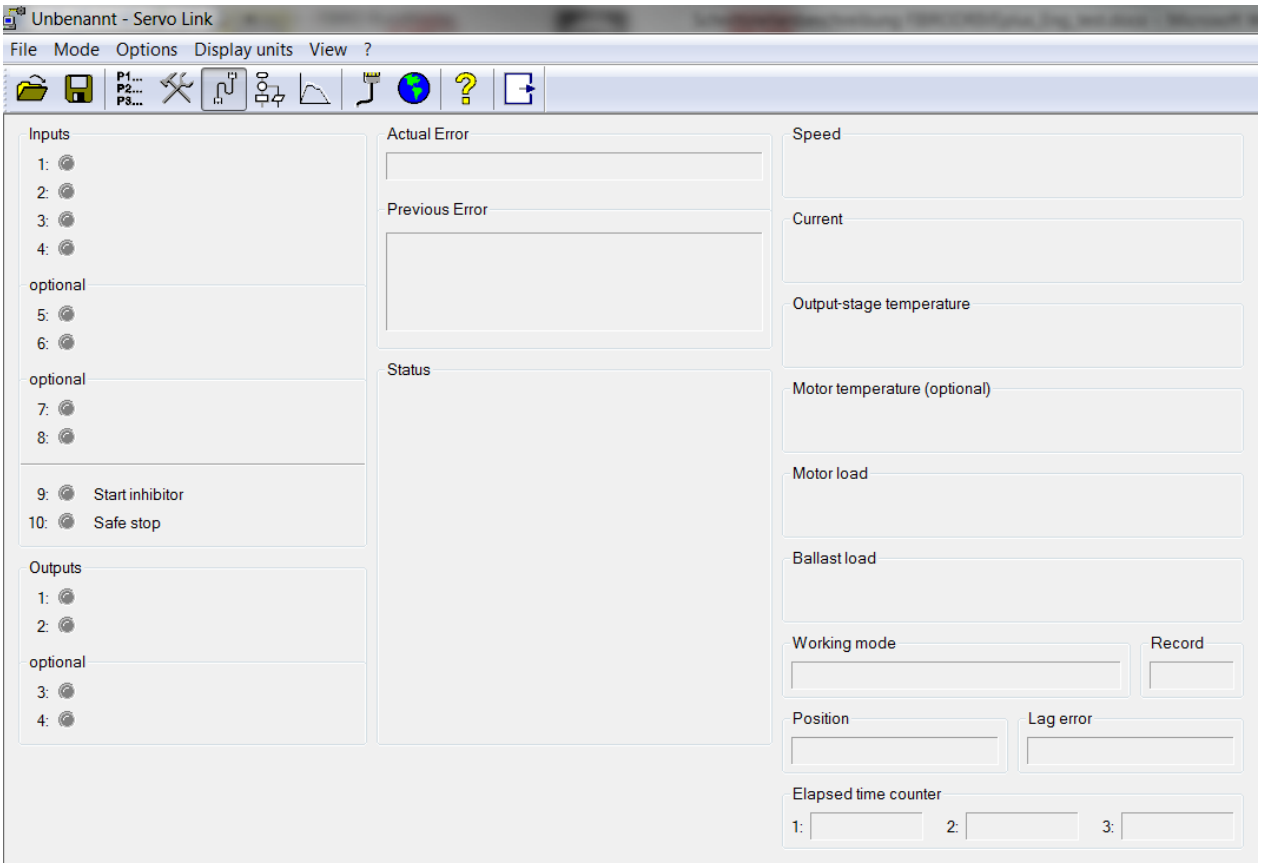

Osciloskop

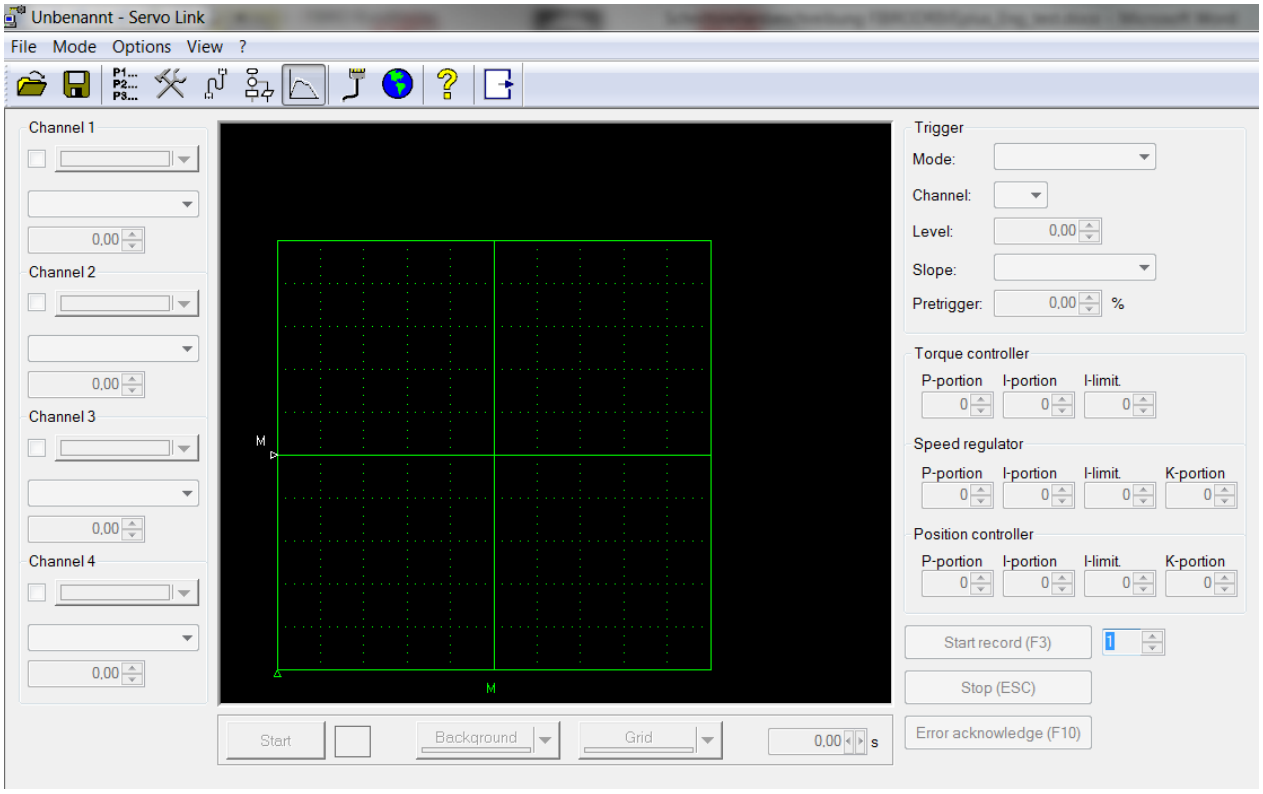

Program

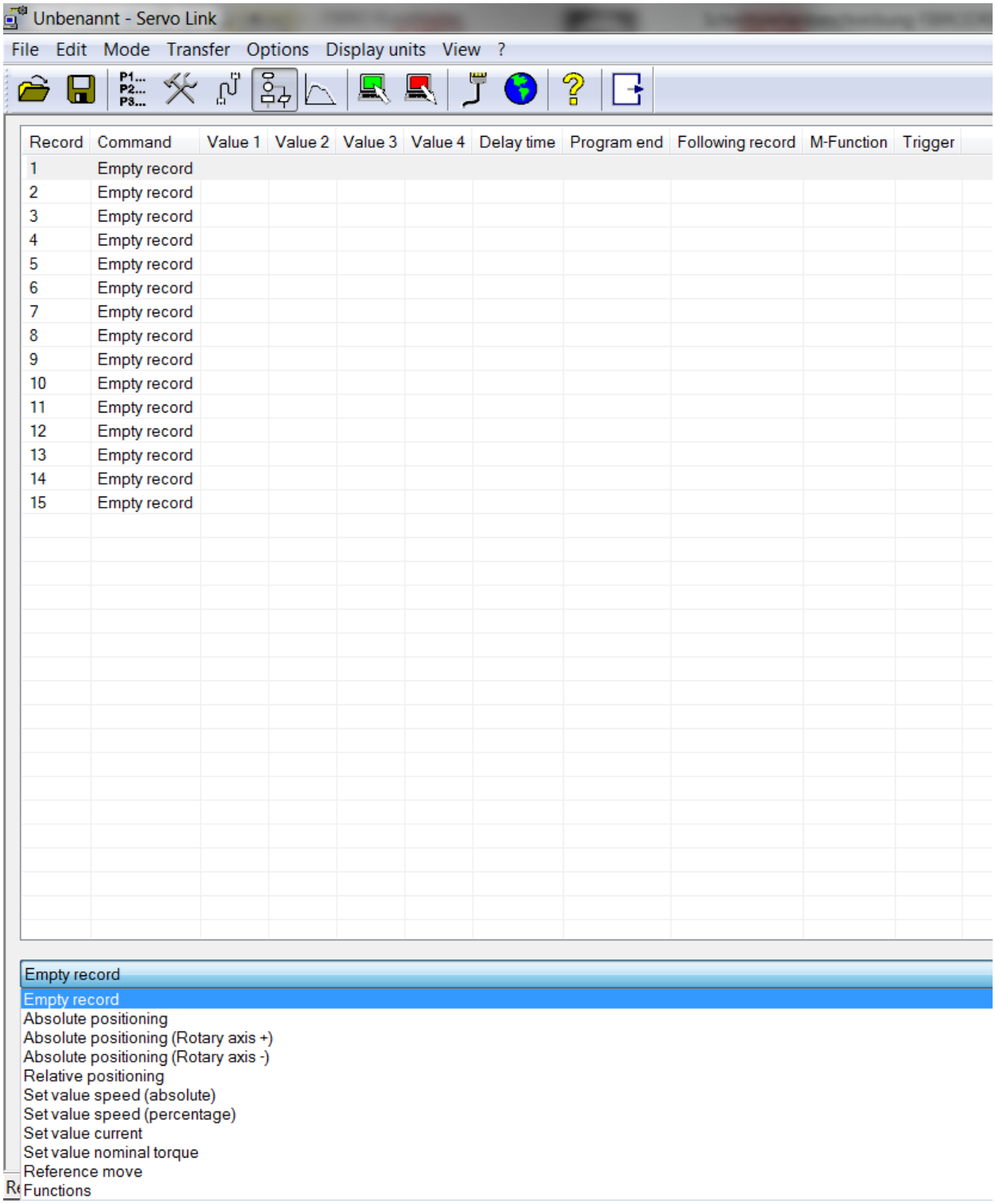

Other possibilities:

- Project Management
- Password protection
- User setting
- Language German / English

FIBRO GmbH Werk I
Postfach 1120 · DE-74183 Weinsberg
Weidachstr. 41-43 · DE-74189 Weinsberg
Telefon +49 (0)71 34-73-0*
Telefax +49 (0) 71 34-73-120

info@fibro.de
www.fibro.com

Amplifier operation

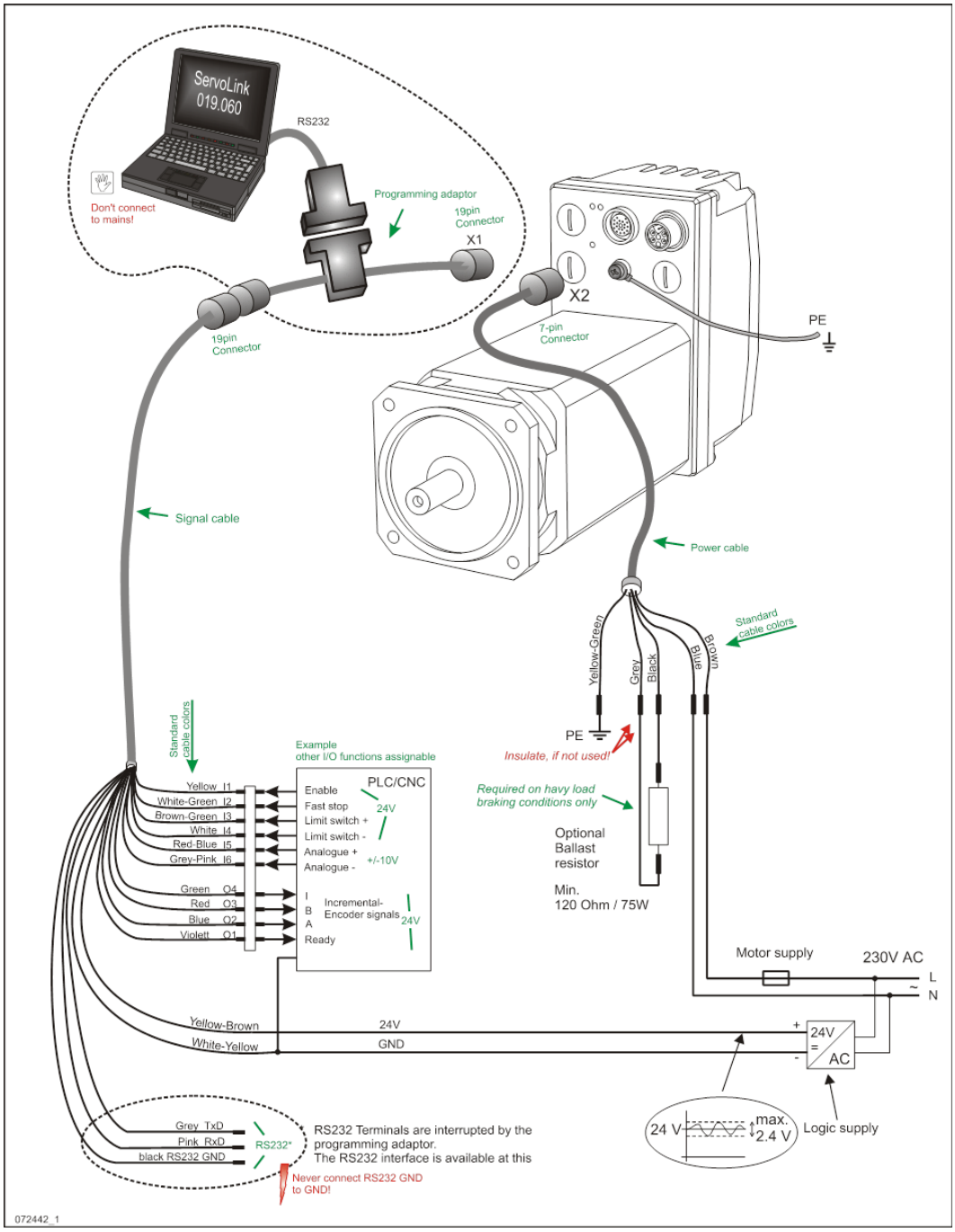

Depending to the operating mode the analog input determines the speed or the torque. Positioning, if required, is done by a superordinate CNC. Encoder outputs return the position feedback. The desired functions are assigned to digital inputs and outputs.

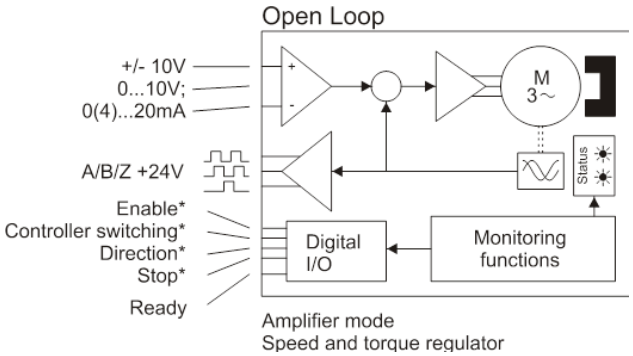

SPS-Interface

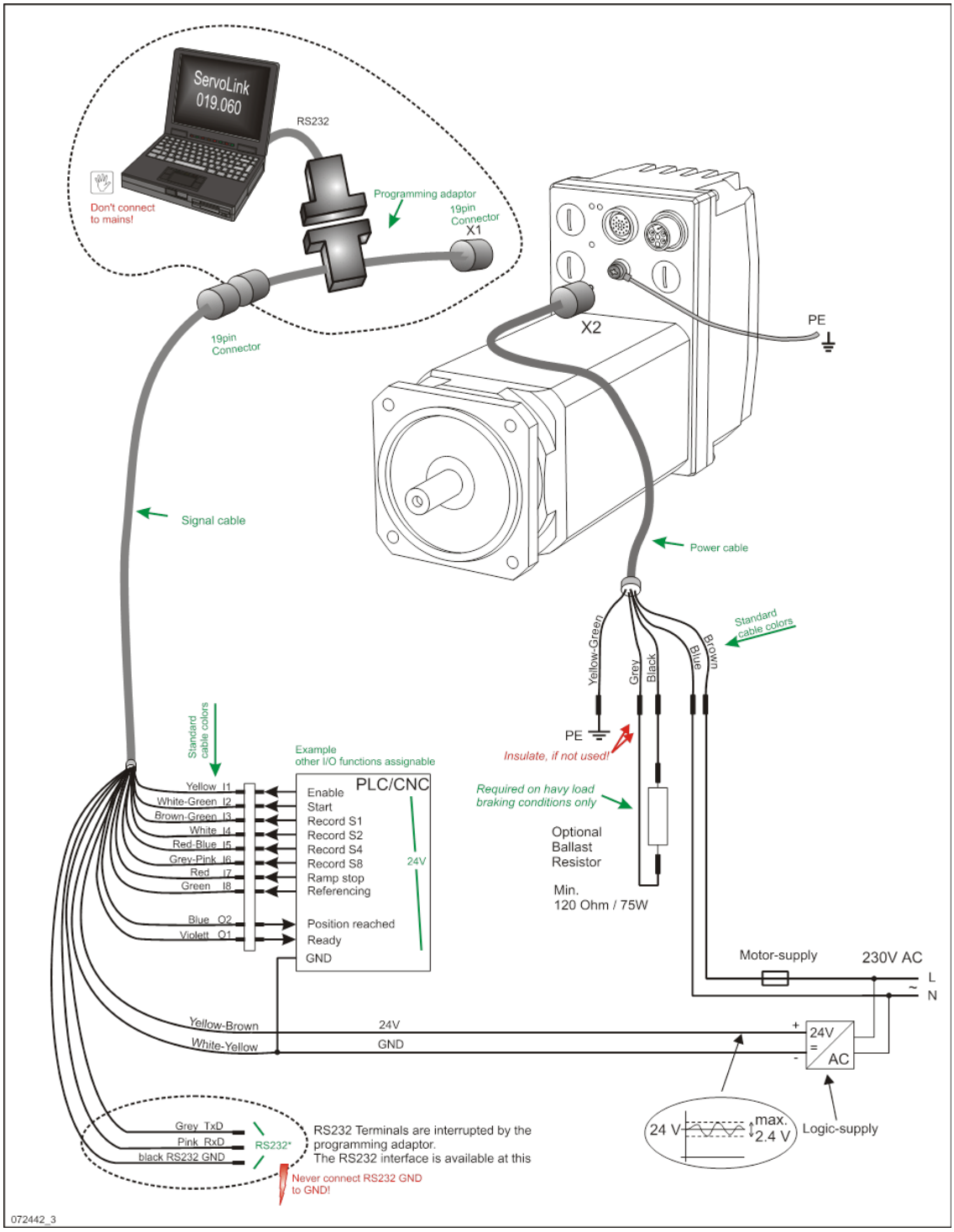

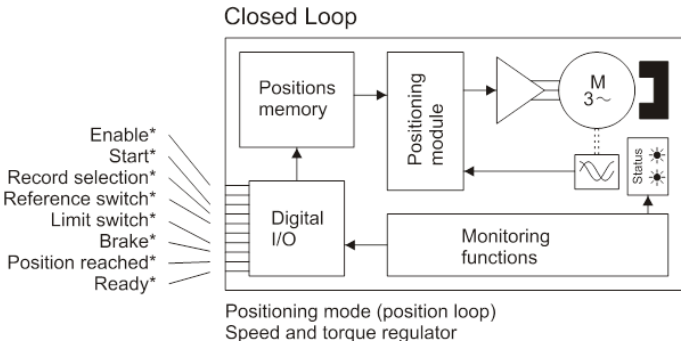

FIBRO GmbH Werk I
Postfach 1120 · DE-74183 Weinsberg
Weidachstr. 41-43 · DE-74189 Weinsberg
Telefon +49 (0)71 34-73-0*
Telefax +49 (0) 71 34-73-120

info@fibro.de
www.fibro.com

Fieldbus CANopen and EtherCAT (only at FIBROTOR EM.NC)

X1
X2
X3
X4
PE
weitere Feldbus-geräte oder Abschlußwiderstand
Sensor-versorgung
Optionale End- oder Referenz-Schalter
7 6 5 4 3 2 1
PE
Beispielhafte Beschaltung
Andere E/A-Funktion sind parametrierbar.
CNC/SPS
Feldbus
Freigabe
Sofortstop
Betriebsbereit
Achse fährt
Masse
Optionaler Ballast Widerstand
Min. 120 Ohm / 75W
Motorversorgung
230V AC
L
N
+24V
24V
AC
GND
TxD
RxD
Adapter (Zubehör)
Servo link 019.060
24 V
max. 2.4 V
Logik-Versorgung
Wenn Schutzeiterkontakt vorhanden nicht mit dem Netz verbinden!
072441_2

Fieldbus connection

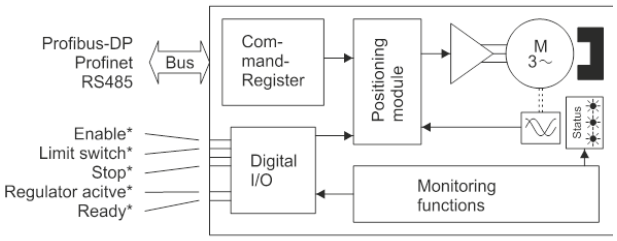

Positioning mode (position loop)
Speed and torque regulator

FIBRO GmbH Werk I
Postfach 1120 · DE-74183 Weinsberg
Weidachstr. 41-43 · DE-74189 Weinsberg
Telefon +49 (0)71 34-73-0*
Telefax +49 (0) 71 34-73-120

info@fibro.de
www.fibro.com

ProfiBus

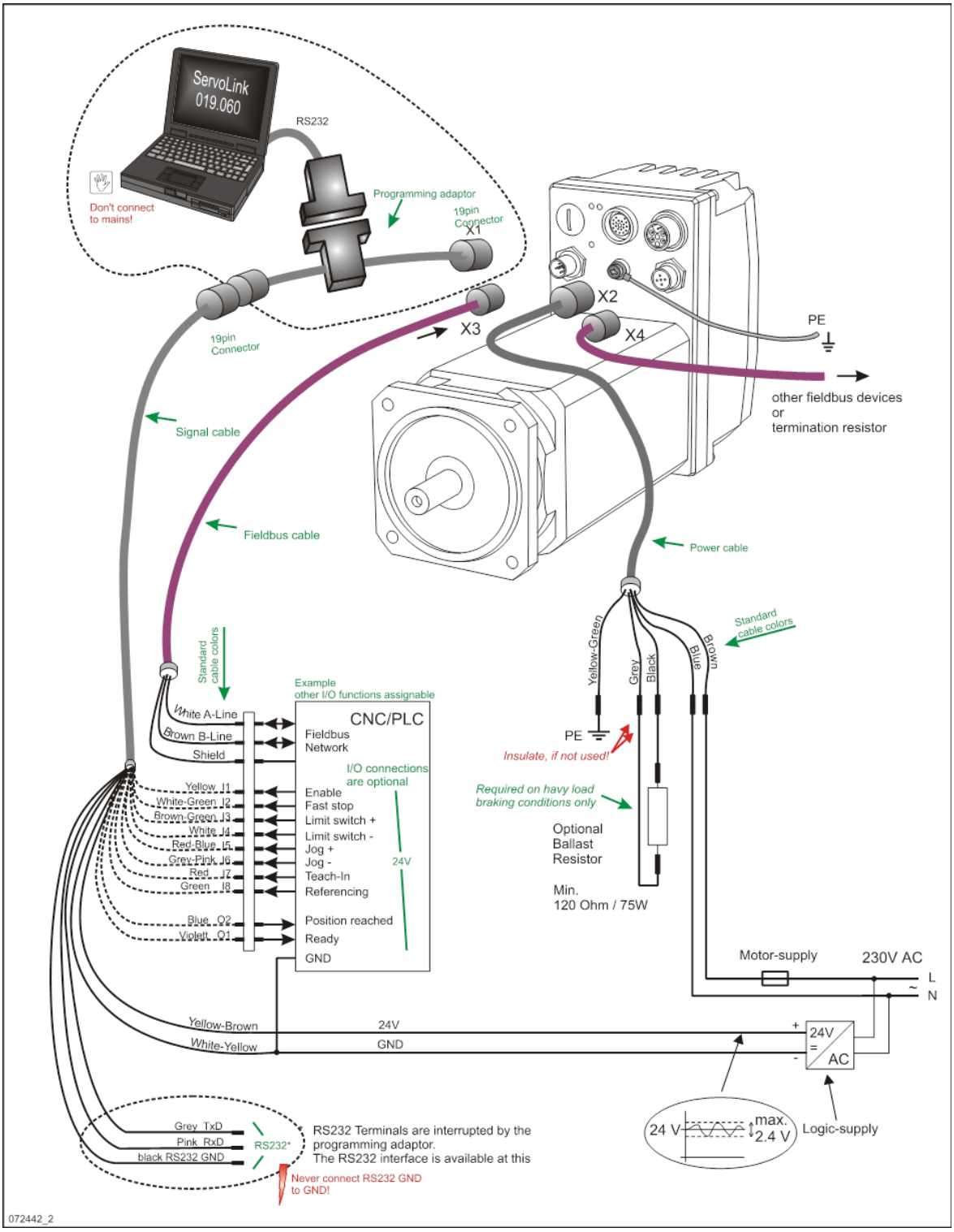

FIBRO GmbH Werk I
Postfach 1120 · DE-74183 Weinsberg
Weidachstr. 41-43 · DE-74189 Weinsberg
Telefon +49 (0)71 34-73-0*
Telefax +49 (0) 71 34-73-120

info@fibro.de
www.fibro.com

ProfiNet

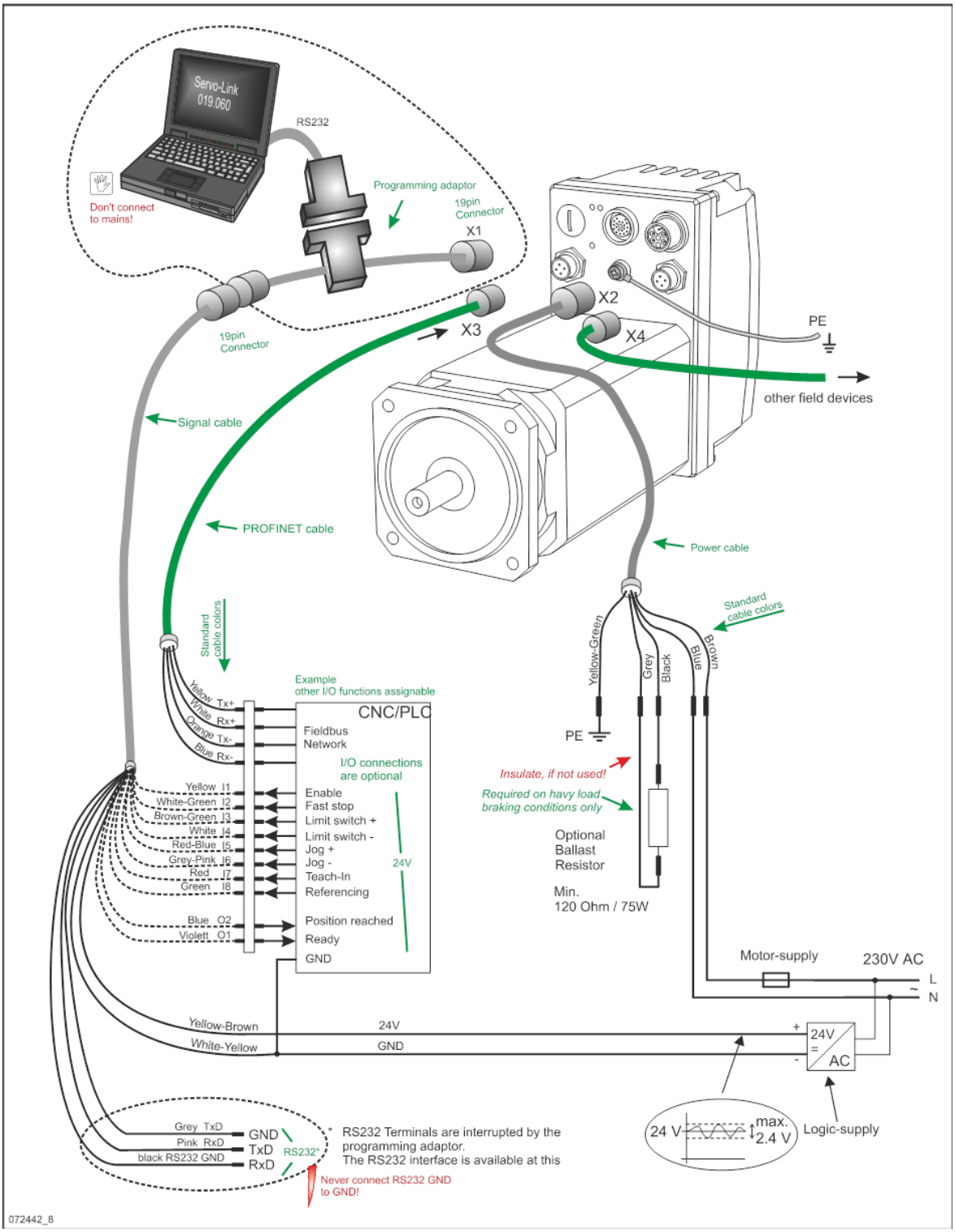

FIBRO GmbH Werk I
Postfach 1120 · DE-74183 Weinsberg
Weidachstr. 41-43 · DE-74189 Weinsberg
Telefon +49 (0)71 34-73-0*
Telefax +49 (0) 71 34-73-120

info@fibro.de
www.fibro.com

SPS-Interface with external encoder (only at FIBROTOR EM.NC)

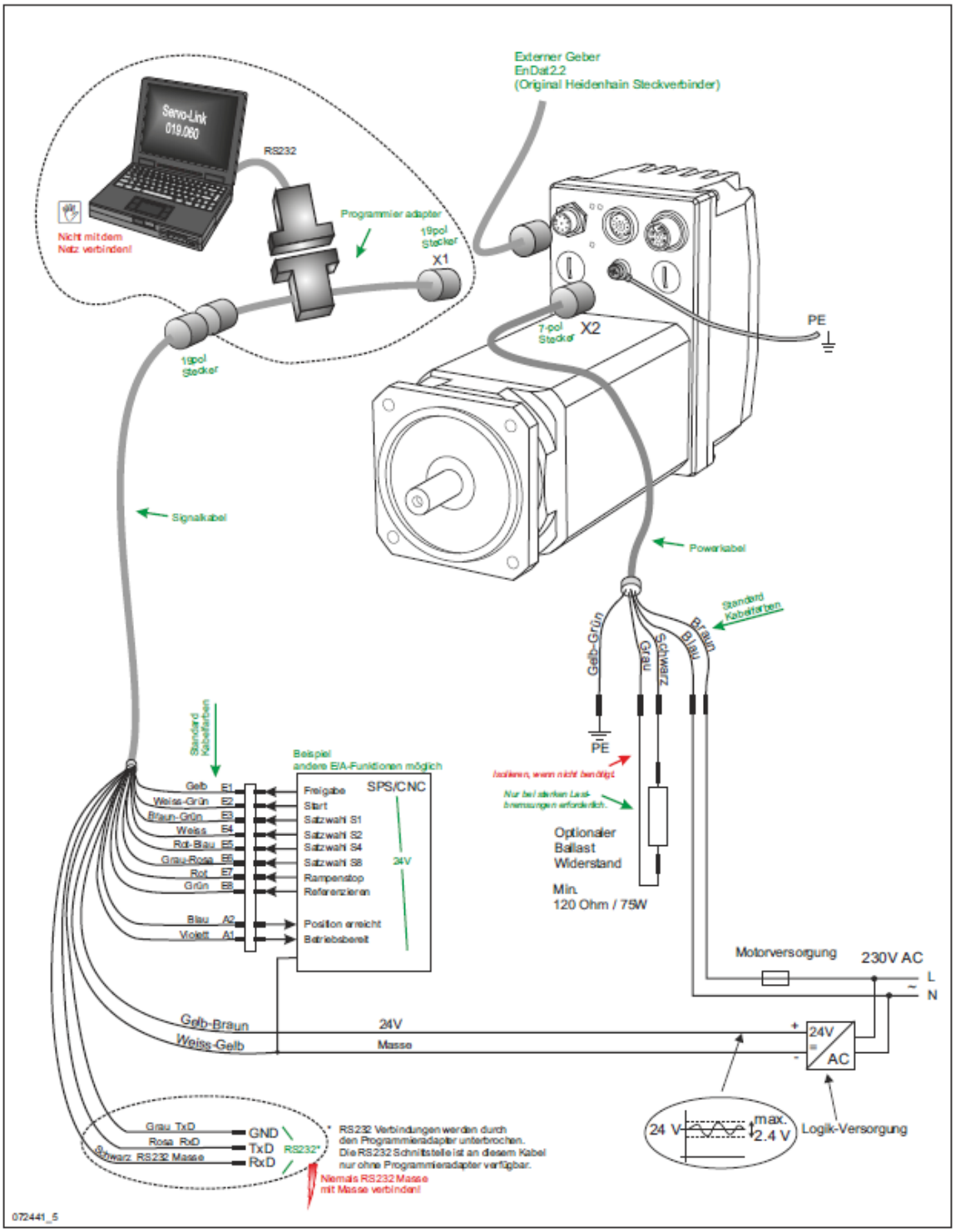

FIBRO-ServoLink and FIBRO-AKB.01

FIBRO-ServoLink

PC Software and documentation
T-adapter for inserting into signal line
RS232 connection cable, with optional USB adapter

PC software for parameter setting and programming of FIBRODRIVE *plus*
- Online diagnostics/oscilloscope
- Automatic recognition of the connected controller versions
- Language selection German/English
- 3 different levels of authorization

System requirements: Windows 98, XP und Windows7

FIBRO-AKB.01

PC Software and documentation
Connecting terminal block
- Plug-in screw clamps for signal connections
- USB interface converter
- Integrated fuse for 24VDC
- Indicator light for 24VDC
- DIN mounting shin module 22.5 mm wide

FIBRO GmbH Werk I
Postfach 1120 · DE-74183 Weinsberg
Weidachstr. 41-43 · DE-74189 Weinsberg
Telefon +49 (0)71 34-73-0*
Telefax +49 (0) 71 34-73-120

info@fibro.de
www.fibro.com

Standard signal cable colours

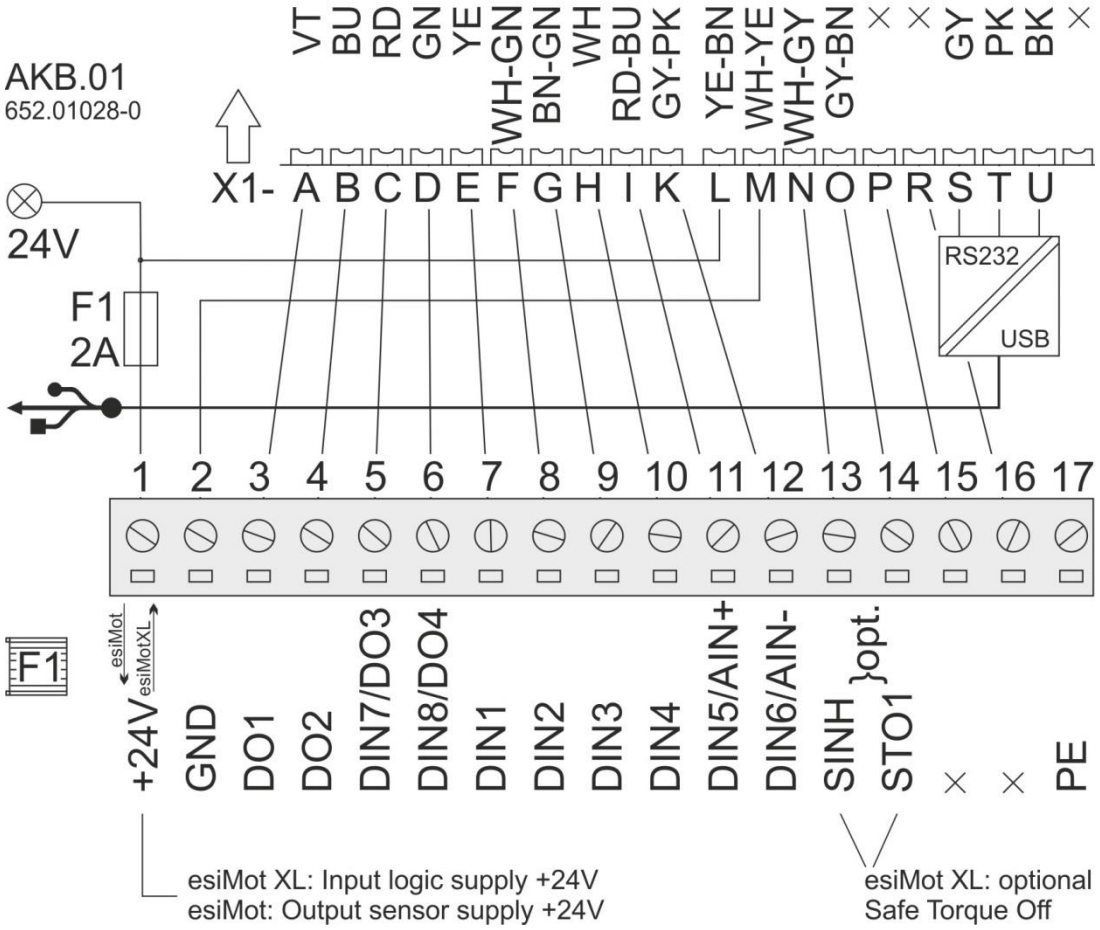

Wiring plug for itself

Are not assembled cables ordered, so the plug also be sent !

- Power plug
- Signal plug

- ProfiBus and ProfiNet plug

Cable assemblies on one side, the other end open

Power cable (230VAC)
Drag chains version with ballast 5 x 1 mm²
length 5 m (Special lengths 10m, 15m, further consequences on request!)
plug 7-pol.

Power cable (400VAC)
Drag chains version with ballast 7 x 1 mm² or. 7 x 1,5 mm²
Länge 5 m (Special lengths 10m, 15m, further consequences on request!)
plug 7-pol. / 6-pol.

Signal cable with Safety stop
Drag chains version
18 x 0,14 mm²
length 5 m (Special lengths 10m, 15m, further consequences on request!)
plug 19-pol.

ProfiBus-cable
Drag chains version
length 5 m (Special lengths 10m, 15m, further consequences on request!)
female connector (IN) 4-pol. connector pin (OUT) 4pol.
(Abschlußwiderstand vorhanden!)

ProfiNet-cable
Drag chains version
length 5 m (Special lengths 10m, 15m, further consequences on request!)
round plug 4-pol. D-codiert

FIBRO GmbH Werk I
Postfach 1120 · DE-74183 Weinsberg
Weidachstr. 41-43 · DE-74189 Weinsberg
Telefon +49 (0)71 34-73-0*
Telefax +49 (0) 71 34-73-120

info@fibro.de
www.fibro.com

Plug X2 / Power cable FIBRODRIVE plus

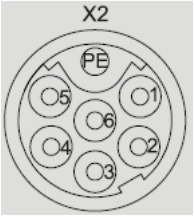

Power cable 230V
DM150

X2 Pin	Wire	Function
1	1	Motor supply L (230V AC)
2	2	Motor supply N (230V AC)
3	\	n.c.
4	3	Ballast
5	4	Ballast
6	\	n.c.
7	yellow/green	PE

Power cable 400V
DM200

X2 Pin	Wire	Function
1	1	Motor supply L1 (400V AC)
2	\	n.c.
3	5	Motor supply L2 (400V AC)
4	3	Ballast
5	4	Ballast
6	6	Motor supply L3 (400V AC)
7	yellow/green	PE

Powercable 400V
DM315
6pol.Rundstecker M23

X2 Pin	Ader	Funktion
1	1	Motor supply L1 (400V AC)
2	2	Motor supply L2 (400V AC)
3	ge/gn	Schutzleiter
4	3	Ballastleitung
5	5	Ballastleitung
6	6	Motor supply L3 (400V AC)

FIBRO GmbH Werk I
Postfach 1120 · DE-74183 Weinsberg
Weidachstr. 41-43 · DE-74189 Weinsberg
Telefon +49 (0)71 34-73-0*
Telefax +49 (0) 71 34-73-120

info@fibro.de
www.fibro.com

Plug X1 / Signal cable FIBRODRIVE plus

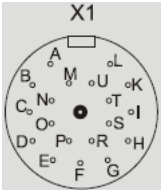

Signal cable

X1 Pin	Wire	Function
A	VT	digital output 1
B	BU	digital output 2
C	RD	digital input 7 / (Option) digital output 3
D	GN	digital input 8 / (Option) digital output 4
E	YE	digital input 1
F	WH-GN	digital input 2
G	BN-GN	digital input 3
H	WH	digital input 4
I	RD-BU	digital input 5
K	GR-PK	digital input 6
L	YE-BN	+24VDC logic supply
M	WH-YE	0VDC logic supply
N	WH-GR	start inhibitor (Option STO)
O	GR-BN	safe stop STO1 (Option STO)
P	\	n.c.
R	\	n.c.
S	GR	RS232 - TxD
T	PK	RS232 - RxD
U	BK	RS232 - Interface refer.potential
	BN	n.c.

FIBRO GmbH Werk I
Postfach 1120 · DE-74183 Weinsberg
Weidachstr. 41-43 · DE-74189 Weinsberg
Telefon +49 (0)71 34-73-0*
Telefax +49 (0) 71 34-73-120

info@fibro.de
www.fibro.com

Plug X3-4 / Fieldbus cable FIBRODRIVE plus

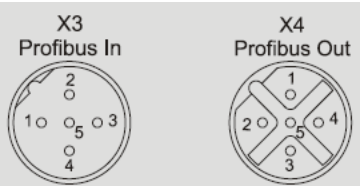

Profibus cable DP

X3-4 Pin	Wire	Function
1		5V
2	WH or GN	A-Line
3		GND
4	BN or RD	B-Line
5	shield	shield
Gehäuse	shield	shield

Profinet cable

X3-4 Pin	Ader	Funktion
1	YE	Tx +
2	WH	Rx +
3	OR	Tx -
4	BU	Rx -

FIBRO GmbH Werk I
Postfach 1120 · DE-74183 Weinsberg
Weidachstr. 41-43 · DE-74189 Weinsberg
Telefon +49 (0)71 34-73-0*
Telefax +49 (0) 71 34-73-120

info@fibro.de
www.fibro.com

Plug X5 / ext. measuring system EnDat 2.2

(Binder 09 3482 700 08, plug socket, EnDat)

X5 Pin	Wire	Funktion
1		0V Sens
2		+5V Sens
3		Data +
4		Data -
5		0V
6		Clock -
7		Clock +
8		5V

FIBRO GmbH Werk I
Postfach 1120 · DE-74183 Weinsberg
Weidachstr. 41-43 · DE-74189 Weinsberg
Telefon +49 (0)71 34-73-0*
Telefax +49 (0) 71 34-73-120

info@fibro.de
www.fibro.com